STRUCTURAL SPECIFICATIONS:

1. FLOODGATE MATERIAL TO BE ALUMINUM AS FOLLOWS:
   LID - 5" x 2 1/2" x 1/8" ALUM EXTRUSIONS - GRADE 6005-T5 MIN. F_Y=35 KSI
   LID AND PAN - 2" x 2" x 1/4" ALUM TUBING - GRADE 6061 MIN. F_Y=35 KSI
   PAN - 1/4" SMOOTH ALUM PLATE - GRADE 5052 MIN. F_Y=25.8 KSI
   ALUM FLAT BARS, STRUCTURAL ANGLES, HINGES GRADE 6061-T6 MIN. F_Y=35 KSI
   ALUM CHANNELS - 4" x 2" x 1/4" VERTICAL & 6" x 2" x 1/4" HORIZONTAL.
2. HINGE BOLTS, PINS, AND MACHINE SCREWS TO BE STAINLESS STEEL - GRADE 304, MIN. F_Y=90 KSI.
3. RETENTION ARM ANCHOR BOLTS SHALL BE STAINLESS STEEL STANDARD THREAD BOLTS SET IN VINYLESTER BASED ADHESIVE CONTAINED IN A GLASS CAPSULE, INSTALLED PER SIMPSON STRONG TIE SPECIFICATIONS.
4. ALUMINUM TO BE WELDED WITH ALUMINUM WIRE - PER 4043 AWS A5.10 3/64.
5. GROUT TO BE COMMERCIAL GRADE NON-SHRINKING GROUT.
6. ALL WELDS REQUIRED FOR STRUCTURAL STRENGTH OF THE LID OR PAN ARE CALLED OUT ON THESE DRAWINGS. ALL OTHER WELDING, NOT SHOWN OR CALLED OUT ON THESE DRAWINGS, ARE ESSENTIALLY NON-STRUCTURAL WELDS OR WELDS WITH NEGLIGIBLE LOADS AND RESULTING STRESSES. EXAMPLES OF SUCH WELDS ARE AT SEAMS, SIDES, PAN TROUGH, AND LID TRIM ANGLES. THESE WELDS ARE TO BE SIZED BY THE FABRICATOR, TAKING INTO CONSIDERATION ASSEMBLY, TRANSPORT LIFT AND CONTINUITY REQUIREMENTS. THEY MUST BE APPROVED BY FLOODBREAK.
7. ALL CONCRETE FOUNDATION POURS AND THEIR TIE-DOWNS TO EXISTING FOUNDATIONS SHOWN IN THESE DRAWINGS ARE FOR ILLUSTRATIVE PURPOSES ONLY. DESIGN OF THE CONCRETE FOUNDATION SLABS IS BY OTHERS. DESIGN AND SUPERVISION OF INSTALLATION OF RETENTION ARMS, ANCHOR BOLTS, AND GATE ANCHORS ARE BY FLOODBREAK. ALL CONCRETE TO BE 4000 PSI MINIMUM 28 DAY STRENGTH. REINFORCED IN EACH DIRECTION WITH ASTM - A615 MIN. F_Y=60 KSI. SPECIAL ATTENTION SHALL BE PAID TO PROPER SUPPORT OF RETENTION ARM ANCHOR BOLTS INTO THE SUPPORTING CONCRETE.
8. ALL GASKET MATERIAL TO BE EPDM RUBBER.
9. ALL DIMENSIONS ARE IN FEET AND INCHES.
10. TOTAL WEIGHT: 899.1 LBS
11. SLOPE: NONE

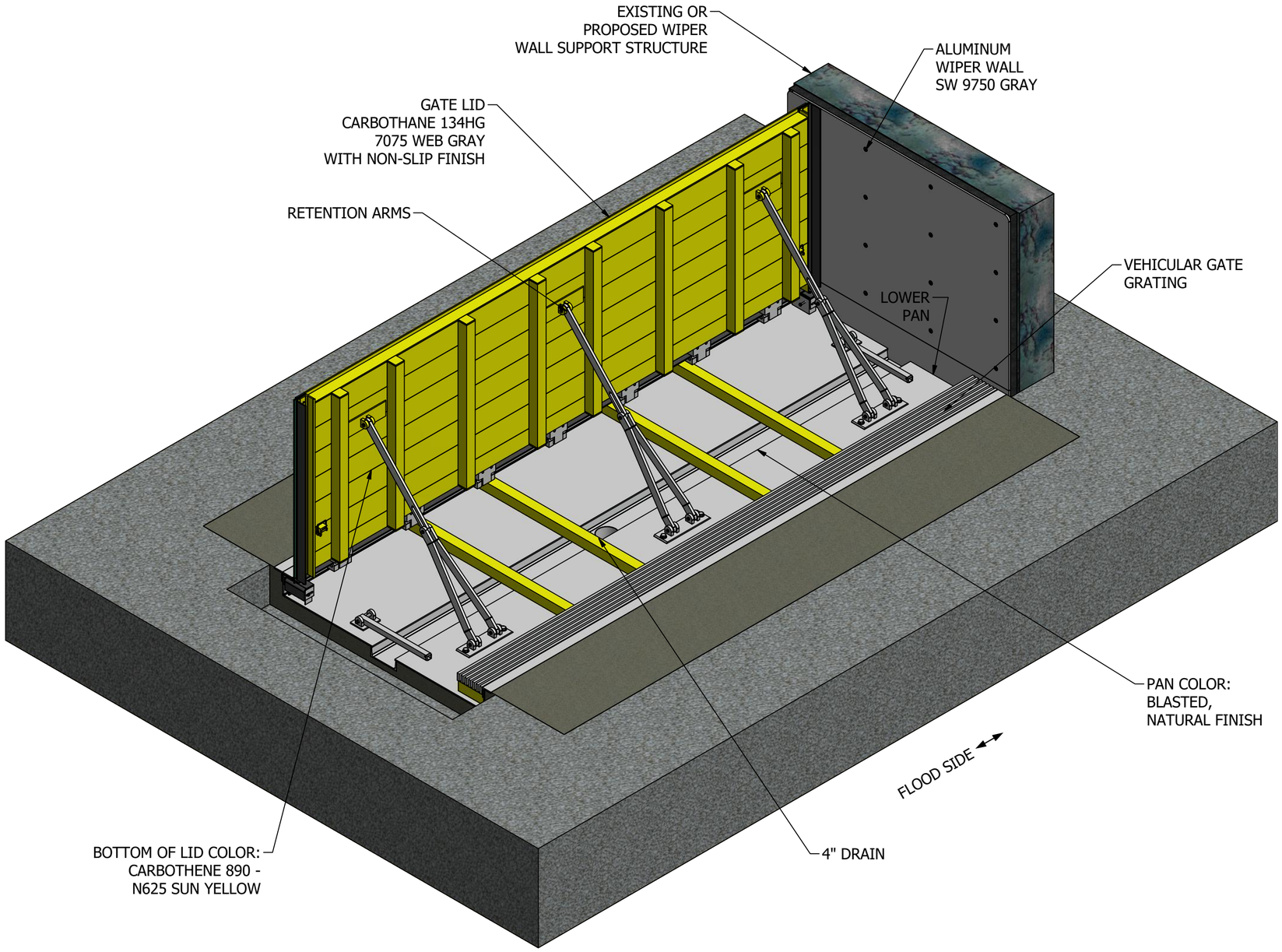

TYPICAL VEHICULAR GATE

NOTE: LAYOUT, SIZES AND DETAIL ARE GATE-SPECIFIC. THIS VIEW SHOWN HAS ONE WIPER WALL REMOVED FOR CLARITY.

GENERAL ISOMETRIC LAYOUT

FloodBreak
REVOLUTIONARY FLOOD CONTROL

DEMO - VEHICULAR GATE
STANDARD LOCATION
VEHICULAR GATE
10'-0" L x 3'-0" H

VG# 0001		
REV 0		
SCALE	VARIES	
DRAWN	A. JOLLY	8/1/2018
CHECKED	N. EASTMAN	8/1/2018
APPROVED	M. POSADA	8/1/2018
SHEET 1 OF 10		

GATE SLOPE VARIATIONS

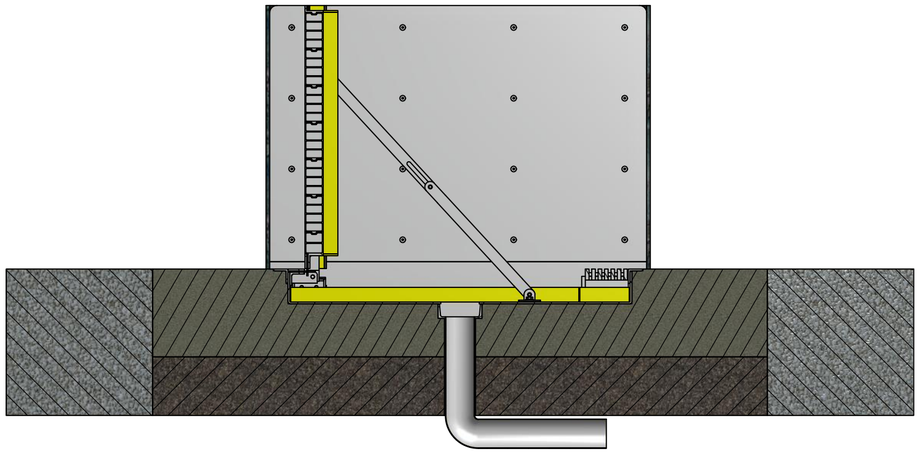

LEVEL GRADE

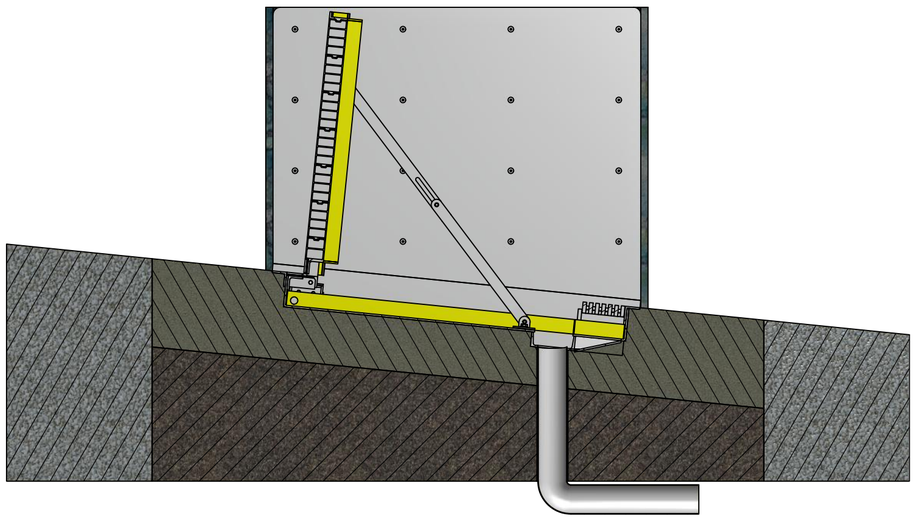

UPSLOPE (POSITIVE)

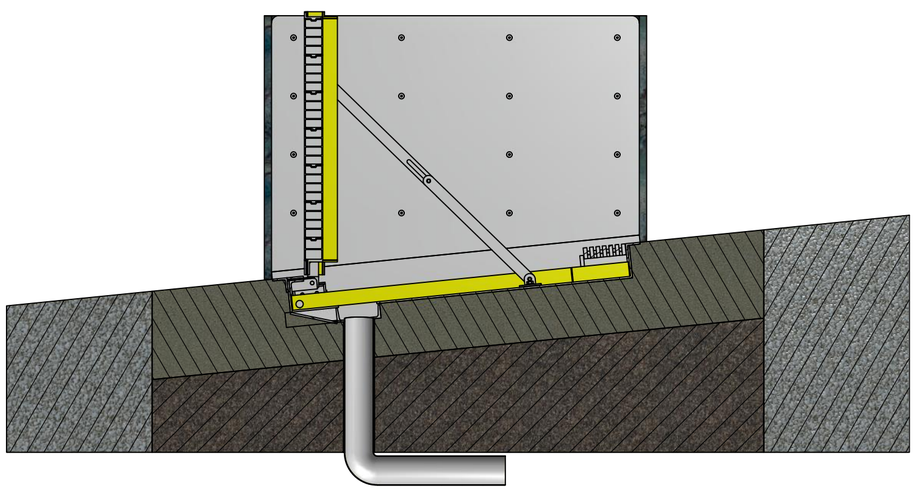

DOWNSLOPE (NEGATIVE)

FloodBreak
REVOLUTIONARY FLOOD CONTROL

DEMO - VEHICULAR GATE
STANDARD LOCATION
VEHICULAR GATE
10'-0" L x 3'-0" H

VG# 0001		
REV 0		
SCALE	VARIES	
DRAWN	A. JOLLY	8/1/2018
CHECKED	N. EASTMAN	8/1/2018
APPROVED	M. POSADA	8/1/2018
SHEET 2 OF 10		

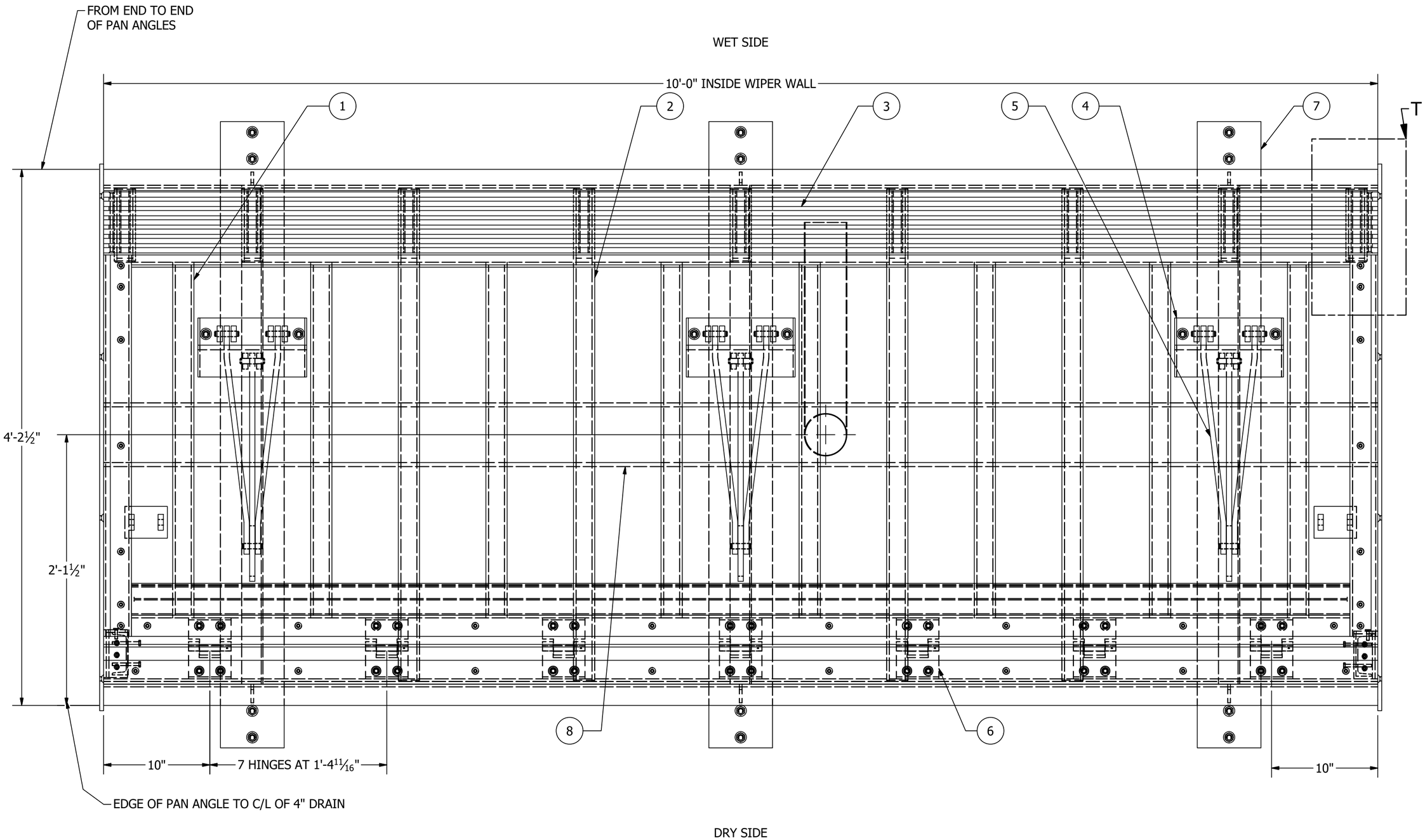

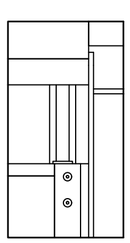

DETAIL T
(PLACE GRATING TUBING, SPACER,
AND STOP AT ENDS OF GATE,
AND ALSO EQUALLY SPACED)

TYP LID AND PAN LAYOUT

PARTS LIST	
ITEM	DESCRIPTION
1	TYPICAL 2"x2"x1/4" LID STIFFENER TUBE
2	TYPICAL 2"x2"x1/4" PAN STIFFENER TUBE
3	TYPICAL GRATING
4	TYPICAL PAN ANCHOR PLATE
5	TYPICAL LID ANCHOR PLATE AND RETENTION ARMS
6	TYPICAL HINGE DETAIL
7	TYPICAL 4" VERTICAL AND 6" HORIZONTA LINSTALL BRACKETS
8	6"x2" CONTINUOUS DRAIN TROUGH

FloodBreak
REVOLUTIONARY FLOOD CONTROL

DEMO - VEHICULAR GATE
STANDARD LOCATION
VEHICULAR GATE
10'-0" L x 3'-0" H

VG# 0001

REV 0

SCALE	VARIES	
DRAWN	A. JOLLY	8/1/2018
CHECKED	N. EASTMAN	8/1/2018
APPROVED	M. POSADA	8/1/2018
SHEET 3 OF 10		

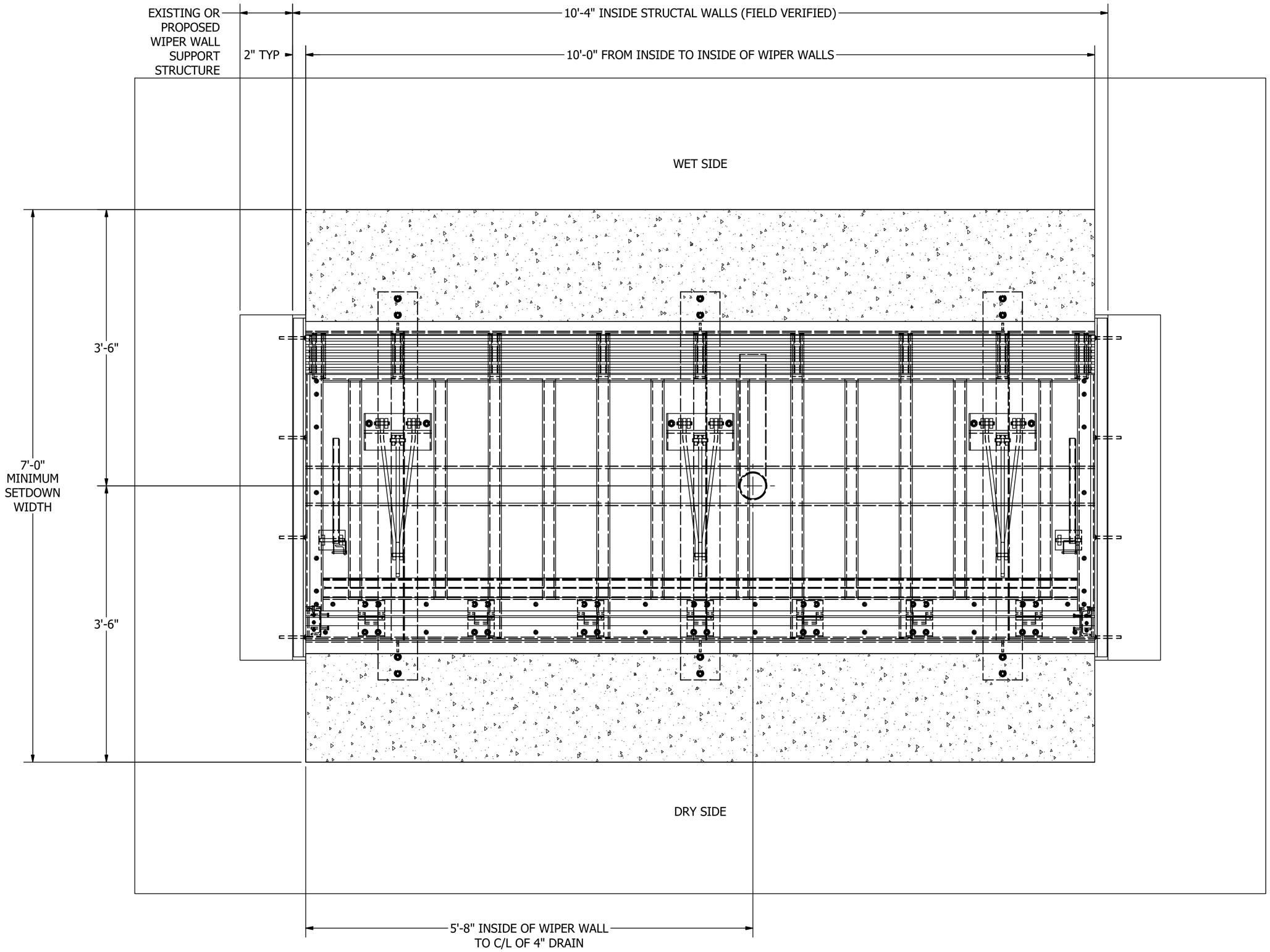

LID AND PAN INSTALLATION VIEW

(WITH CONCRETE SET-DOWN)

GENERAL FORMULA FOR SET-DOWN:
GATE HEIGHT + 48" = WIDTH
GATE LENGTH + 4" = LENGTH
12" TOPPING SLAB = DEPTH

FloodBreak
REVOLUTIONARY FLOOD CONTROL

DEMO - VEHICULAR GATE
STANDARD LOCATION
VEHICULAR GATE
10'-0" L x 3'-0" H

VG# 0001		
REV 0		
SCALE	VARIES	
DRAWN	A. JOLLY	8/1/2018
CHECKED	N. EASTMAN	8/1/2018
APPROVED	M. POSADA	8/1/2018
SHEET 4 OF 10		

TYPICAL CROSS-SECTION OF GATE ASSEMBLY

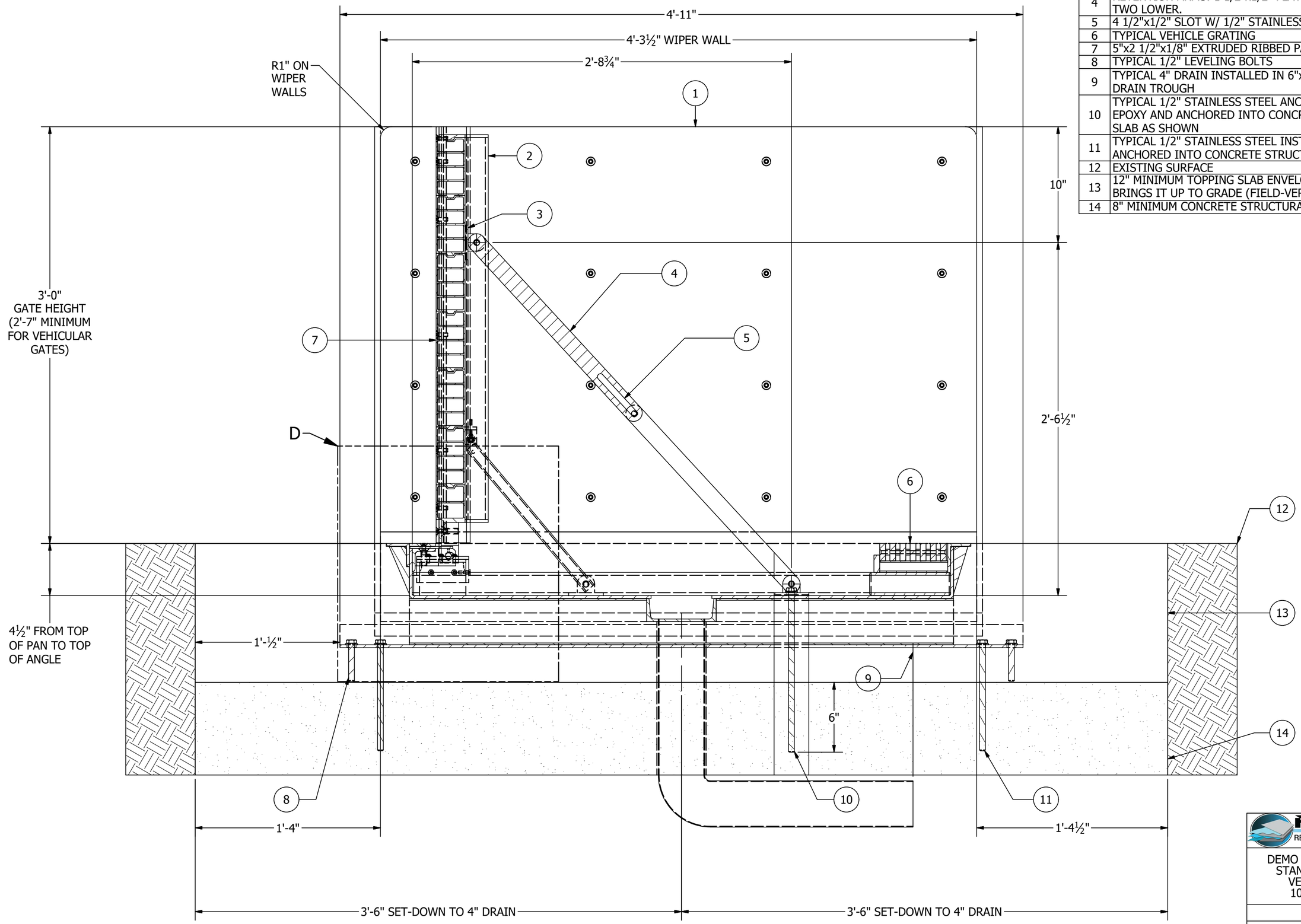

PARTS LIST	
ITEM	DESCRIPTION
1	PROPOSED OR EXISTING WIPER WALL SUPPORT STRUCTURE (BY OTHERS)
2	2"x2"x1/4" LID STIFFENER TUBE
3	RETENTION ARM ANCHOR PLATE
4	RETENTION ARMS: 1 1/2"x1/2" FLAT STOCK, ONE UPPER, TWO LOWER.
5	4 1/2"x1/2" SLOT W/ 1/2" STAINLESS STEEL PIN
6	TYPICAL VEHICLE GRATING
7	5"x2 1/2"x1/8" EXTRUDED RIBBED PANELS
8	TYPICAL 1/2" LEVELING BOLTS
9	TYPICAL 4" DRAIN INSTALLED IN 6"x2" CONTINUOUS DRAIN TROUGH
10	TYPICAL 1/2" STAINLESS STEEL ANCHOR BOLTS SET IN EPOXY AND ANCHORED INTO CONCRETE STRUCTURAL SLAB AS SHOWN
11	TYPICAL 1/2" STAINLESS STEEL INSTALLATION BOLTS ANCHORED INTO CONCRETE STRUCTURAL SLAB
12	EXISTING SURFACE
13	12" MINIMUM TOPPING SLAB ENVELOPES PAN AND BRINGS IT UP TO GRADE (FIELD-VERIFY SET-DOWN)
14	8" MINIMUM CONCRETE STRUCTURAL SLAB (BY OTHERS)

FloodBreak
REVOLUTIONARY FLOOD CONTROL

DEMO - VEHICULAR GATE
STANDARD LOCATION
VEHICULAR GATE
10'-0" L x 3'-0" H

VG# 0001		
REV 0		
SCALE	VARIES	
DRAWN	A. JOLLY	8/1/2018
CHECKED	N. EASTMAN	8/1/2018
APPROVED	M. POSADA	8/1/2018
SHEET 5 OF 10		

PARTS LIST	
ITEM	DESCRIPTION
1	TYPICAL 2"x2"x1/4" ANGLE
2	TYPICAL 2"x2"x1/4" PAN STIFFENER TUBE
3	6"x2" CONTINUOUS DRAIN TROUGH
4	TYPICAL VEHICULAR GRATING
5	PAN
6	4"x2"x1/4" VERTICAL CHANNEL INSTALL BRACKET
7	6"x2"x1/4" HORIZONTAL CHANNEL INSTALL BRACKET
8	TYPICAL 2"x2"x1/4" LID STIFFENER TUBE

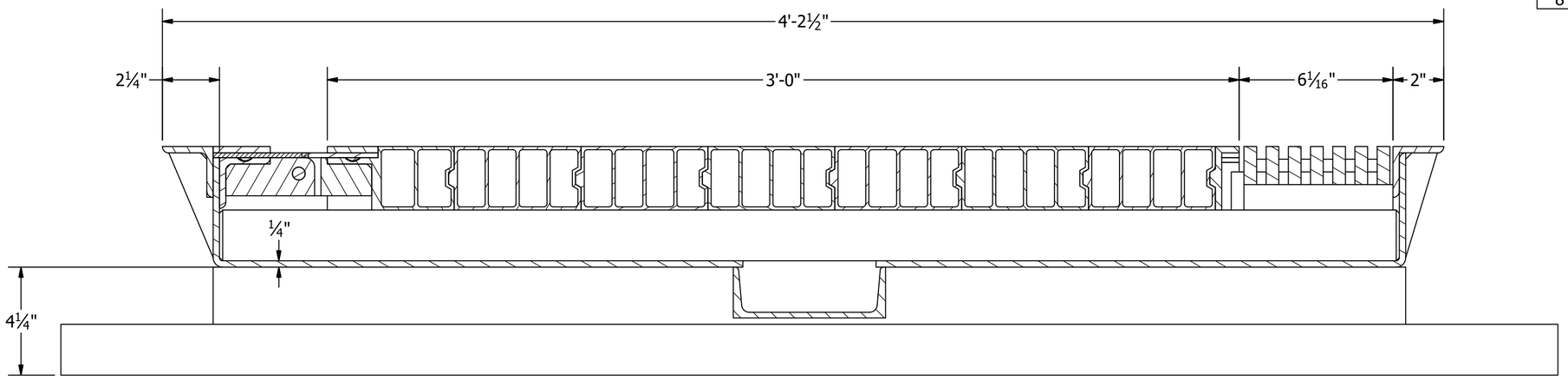

LID AND PAN SECTION

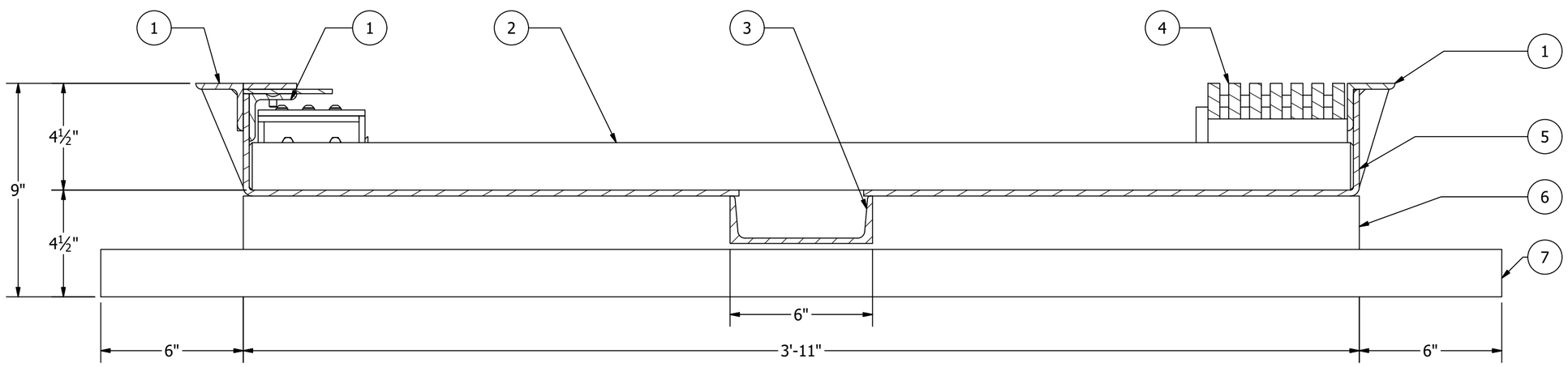

PAN SECTION

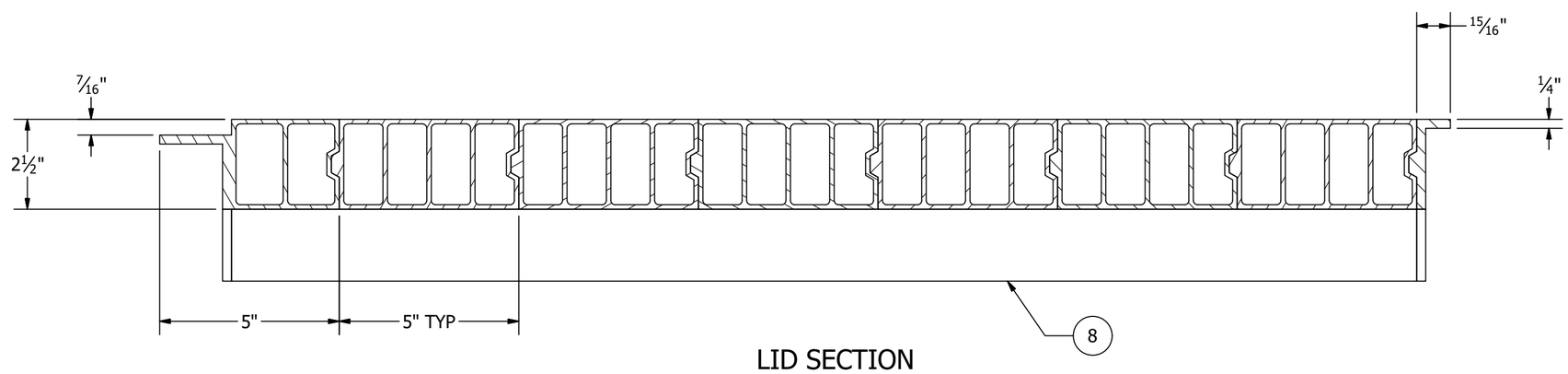

LID SECTION

FloodBreak
REVOLUTIONARY FLOOD CONTROL

DEMO - VEHICULAR GATE
STANDARD LOCATION
VEHICULAR GATE
10'-0" L x 3'-0" H

VG# 0001		
REV 0		
SCALE	VARIES	
DRAWN	A. JOLLY	8/1/2018
CHECKED	N. EASTMAN	8/1/2018
APPROVED	M. POSADA	8/1/2018
SHEET 6 OF 10		

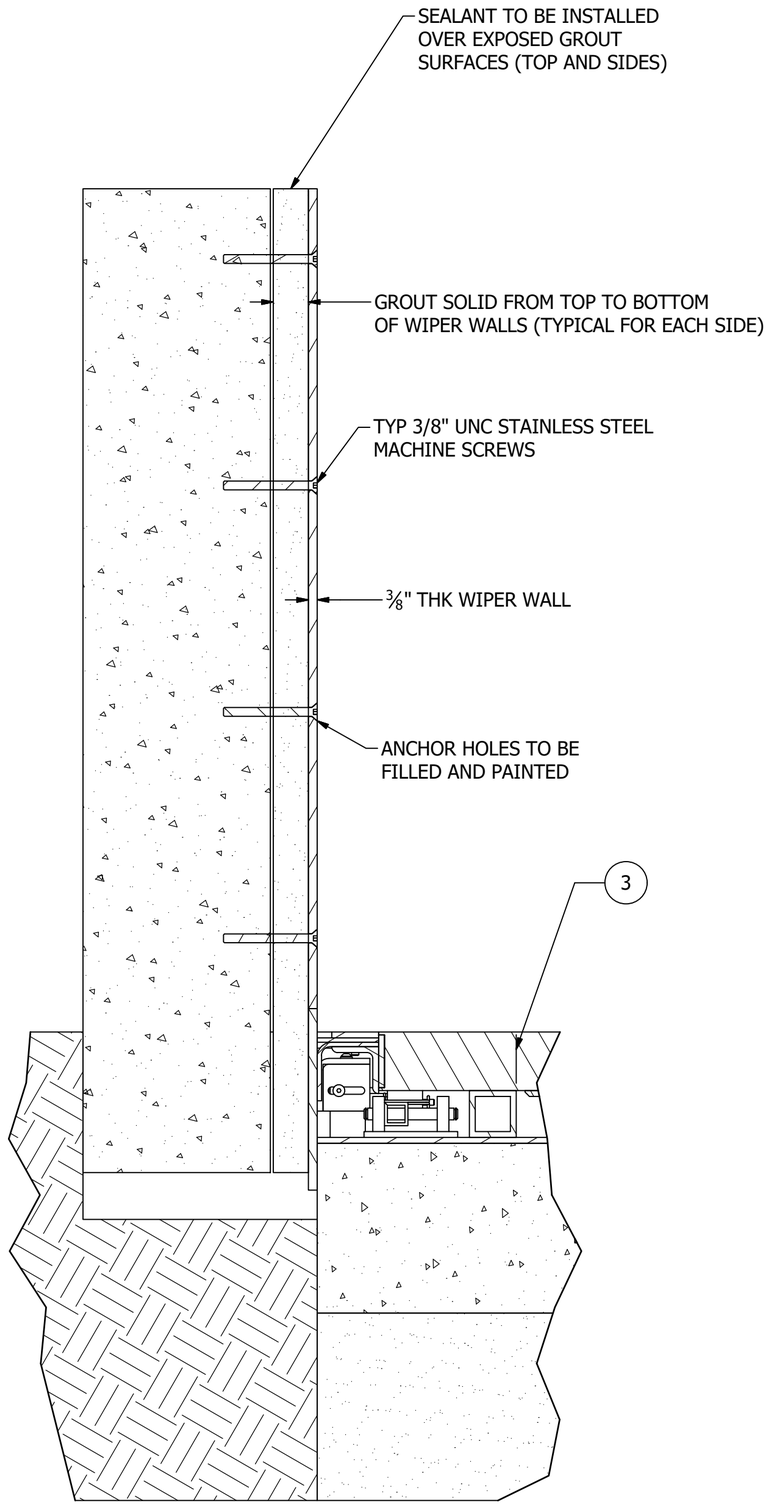

TYP WIPER WALL FRONT SECTION

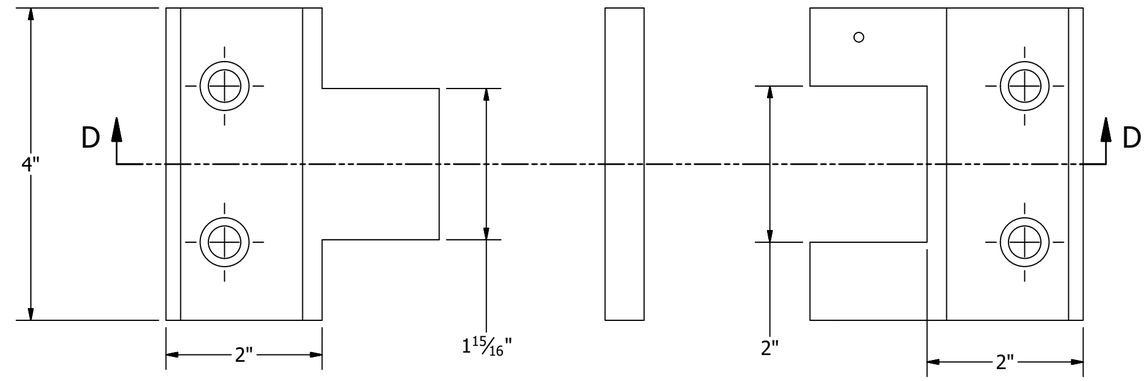

HINGE SECTION D-D

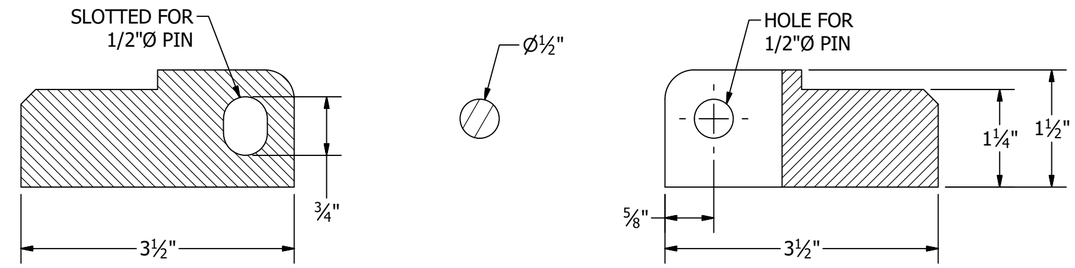

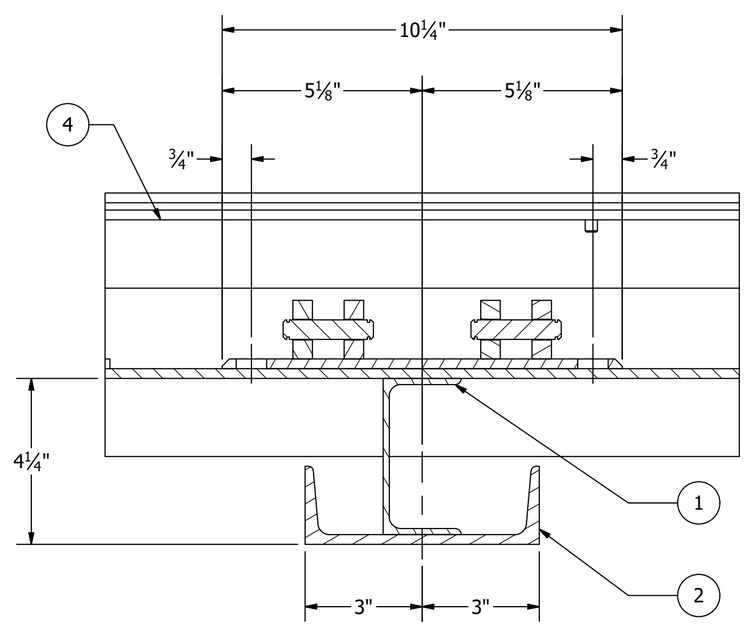

TYP PAN COMPONENT ASSY

PARTS LIST	
ITEM	DESCRIPTION
1	4"x2"x1/4" VERTICAL INSTALL BRACKET
2	6"x2"x1/4" HORIZONTAL INSTALL BRACKET
3	TYPICAL 2"x2"x1/4" PAN STIFFENER TUBE
4	TYPICAL 2"x2"x1/4" ANGLE

FloodBreak
REVOLUTIONARY FLOOD CONTROL

DEMO - VEHICULAR GATE
STANDARD LOCATION
VEHICULAR GATE
10'-0" L x 3'-0" H

VG# 0001		
REV 0		
SCALE	VARIES	
DRAWN	A. JOLLY	8/1/2018
CHECKED	N. EASTMAN	8/1/2018
APPROVED	M. POSADA	8/1/2018
SHEET 7 OF 10		

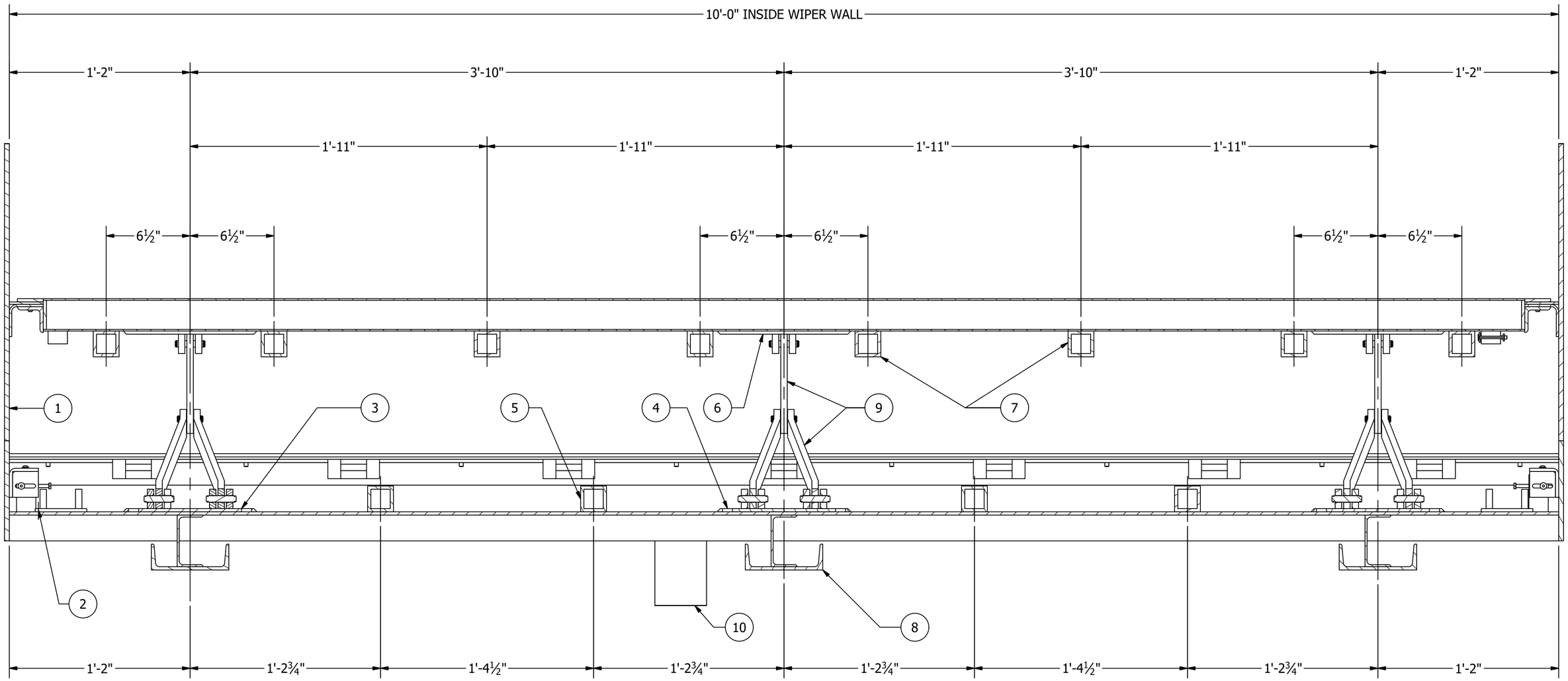

PARTS LIST	
ITEM	DESCRIPTION
1	WIPER WALL
2	PRESSURE PLATE
3	PAN ANCHOR PLATE
4	LID W/ TYP 5"x2 1/2"x1/8" EXTRUDED PANELS
5	TYP 2"x2"x1/4" PAN STIFFENER
6	LID ANCHOR PLATE
7	TYP 2"x2"x1/4" LID STIFFENER
8	TYP 4" VERTICAL AND 6" HORIZONTAL INSTALL BRACKETS
9	TYP RETENTION ARMS
10	4" DRAIN INSTALLED TO 6"x2" CONTINUOUS TROUGH

FloodBreak
REVOLUTIONARY FLOOD CONTROL

DEMO - VEHICULAR GATE
STANDARD LOCATION
VEHICULAR GATE
10'-0" L x 3'-0" H

VG# 0001

REV 0

SCALE	VARIES	
DRAWN	A. JOLLY	8/1/2018
CHECKED	N. EASTMAN	8/1/2018
APPROVED	M. POSADA	8/1/2018
SHEET 8 OF 10		

LID AND PAN COMPONENT LAYOUT

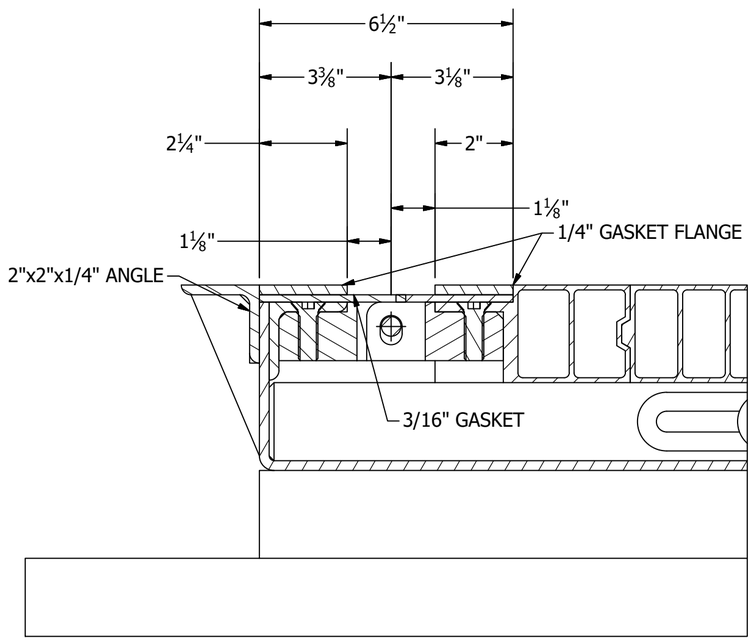

HINGE DETAIL CLOSED

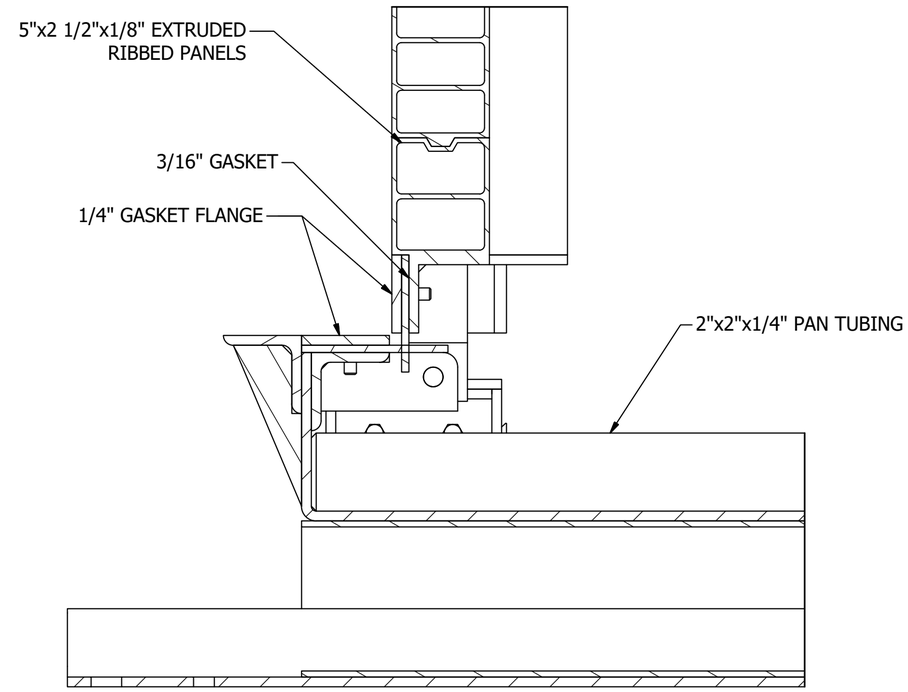

DETAIL D (SHEET 4)
HINGE OPEN

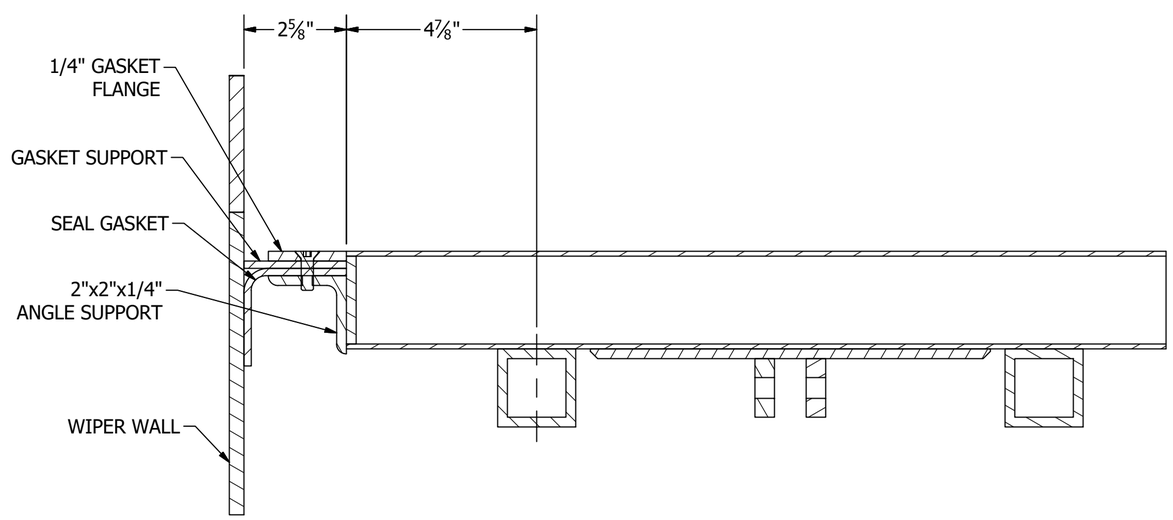

TYPICAL LID AT WIPER WALL

FloodBreak
REVOLUTIONARY FLOOD CONTROL

DEMO - VEHICULAR GATE
STANDARD LOCATION
VEHICULAR GATE
10'-0" L x 3'-0" H

VG# 0001		
REV 0		
SCALE	VARIES	
DRAWN	A. JOLLY	8/1/2018
CHECKED	N. EASTMAN	8/1/2018
APPROVED	M. POSADA	8/1/2018
SHEET 9 OF 10		

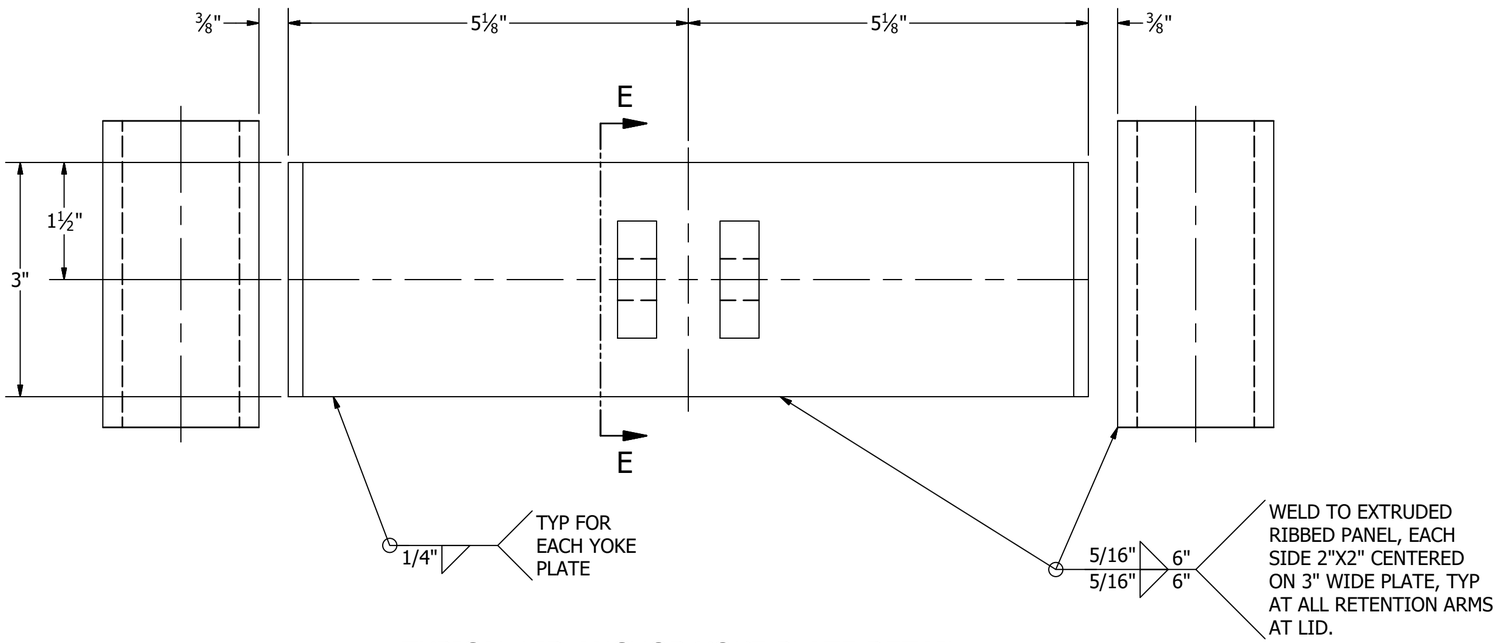

TYPICAL LID ANCHOR YOKE PLATE DETAIL

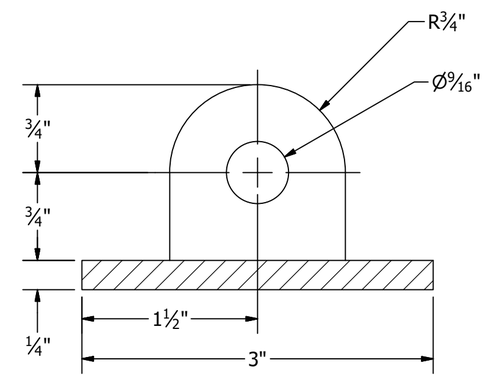

SECTION E-E

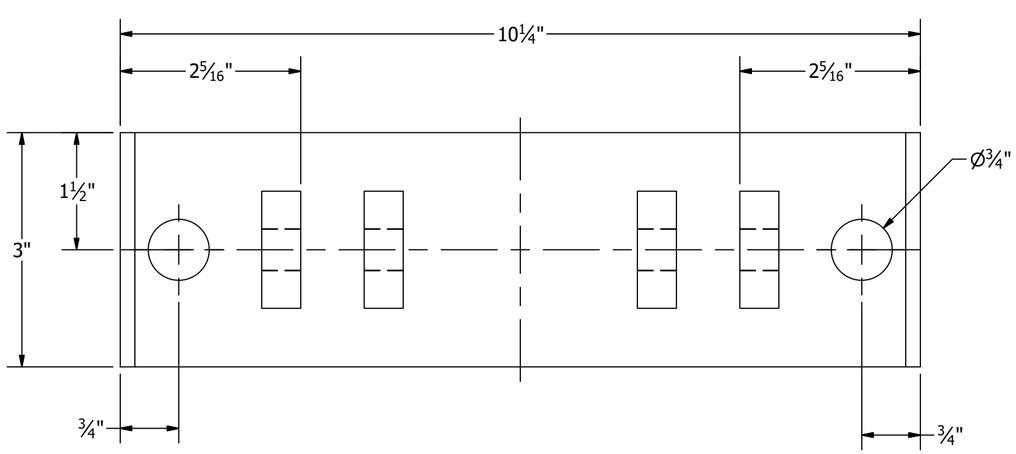

TYPICAL PAN ANCHOR PLATE DETAIL

FloodBreak
REVOLUTIONARY FLOOD CONTROL

DEMO - VEHICULAR GATE
STANDARD LOCATION
VEHICULAR GATE
10'-0" L x 3'-0" H

VG# 0001		
REV 0		
SCALE	VARIES	
DRAWN	A. JOLLY	8/1/2018
CHECKED	N. EASTMAN	8/1/2018
APPROVED	M. POSADA	8/1/2018
SHEET 10 OF 10		